Operation manual

FC-TI A-EX High precise small blind ultrasonic liquid level sensor(meter

(with anti-explosion circuit)

Contents

I. General information

FC-TI A-EX High precise small blind area ultrasonic level sensor(meter) with anti-explosion circuit is specially designed for untouchable working condition with small blind spot and high accuracy. It is considered to be the first creation of ultrasonic level meter with blind spot of less than 0.06 m and accuracy of ± 1mm in our country. It is a ultrasonic level sensor(meter) designed with totally digital technology and humanization, which has absorbed different advantages of various kinds of level meters at home and abroad. It has perfect functions of level measuring and control, data transmission and man-machine communication. It adopts imported newly industrial single chip and some specialized ICs of digital temperature compensation and so on. It is good anti-interference, and can set high limit and low limit and adjust on-line output freely. There are several outputs like analog output, switch output and RS485/232 output for selection . Because of waterproof shell and non-contact testing mode, it is cleaner, compared with other meters and better than others in resistance of moisture, dust and high temperature. It has features of high reliability, no pollution and stability. It is widely used in various fields concerning level measuring and control. This sensor conforms to the Chinese national standard No.GB3836.1—2000 / GB3836.4—2000 and its requirement of anti-explosion.

II. Characteristics

- Restore factory-setting values by keyboard.
- Set “difference measure mode” ,to measure level directly.
- Direct display of weight inside container after setting “Weight integrating coefficient”
- Two groups limit control output (NPN), for control of level and liquid level control (if ordering level meter with switch output)
- LED display turn off automatically during working ,to save power.

- 4～20mA output, RS485 /RS232 serial data output or 0～5V or 1-10V analog output(to be selected before order)
- Free adjustment of the range within the max.range for current or voltage output
- Select PC serial port output and adapters, capable of PC networking(to be selected before order)
- Optional of “increment measure mode” or “difference measure mode” ,to measure distance or level.
- , The parameters of sensor can be reset by its own keyboard
- 1-15 transmitted pulse intensity ,depending on working conditions
- Free setting of start point and end point in the detecting range.

III. Specifications

Max.detecting range：1m

Blind spot：≤0.06m

Output: 4~20mA

Working frequency：20～350KHz

Accuracy: +/-1mm

Maximum load resistance: 350Ω

Min. display resolution：1mm

Display：4-digits 0.36” LED tube

Keyboard：The three touch keys of A, B and C.

Overall dimension：Ø 75mm×117mm×M49

Installation hole： M49×1.5MM

Working voltage: DC12V

Max. power consumption: <1.5W

Working temperature：Atmospheric temperature

Working humidity: <95%RH

Working pressure：Atmospheric pressure

Protection grade:IP65

With anti-explosion circuit

IV. Menu operation and parameters setting

1. Keys function

Ⓐmenu and page key

ⒷON-OFF display, shift and save key

Ⓒdisplay selection (temperature/ measured value) and parameters setting key

<u>To restore factory' settings:</u>

After powering off, keep pressing "A" and "C" keys at the same time, meanwhile, power on the meter until display of " dAtA"

Note: Press "C" key for digit input in the sequence of "0～9 .–" . After revising every parameter ,Press "A" key to save the current parameter and enter into next menu. After completing the setting, "A" key must be pressed for a long time to save the setting and exit current menu. In case the wrong inputs do not require to save during setting, just turn off the power.

2. Menu operation

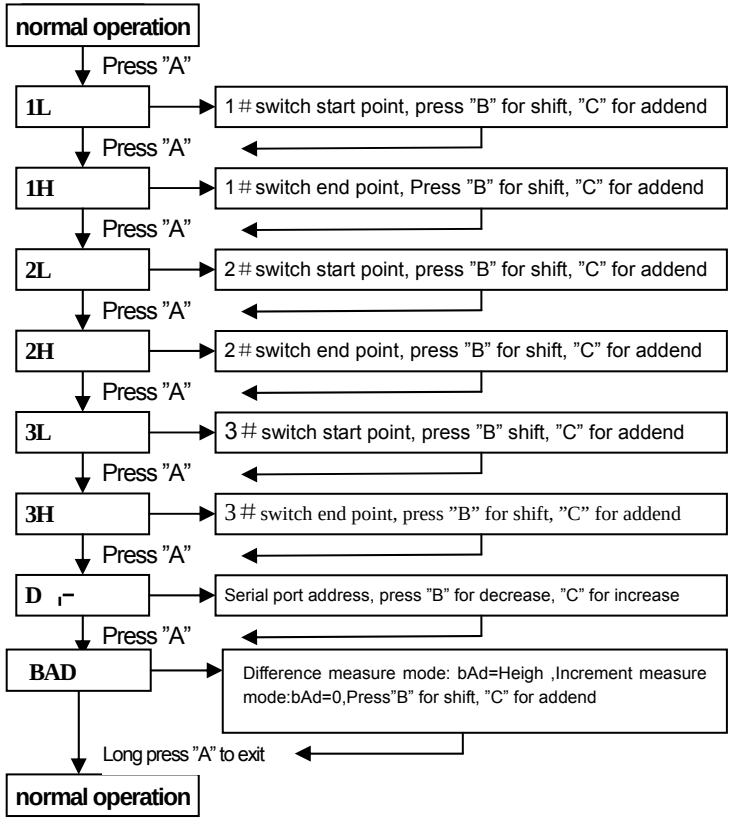

3. Menu adjustment

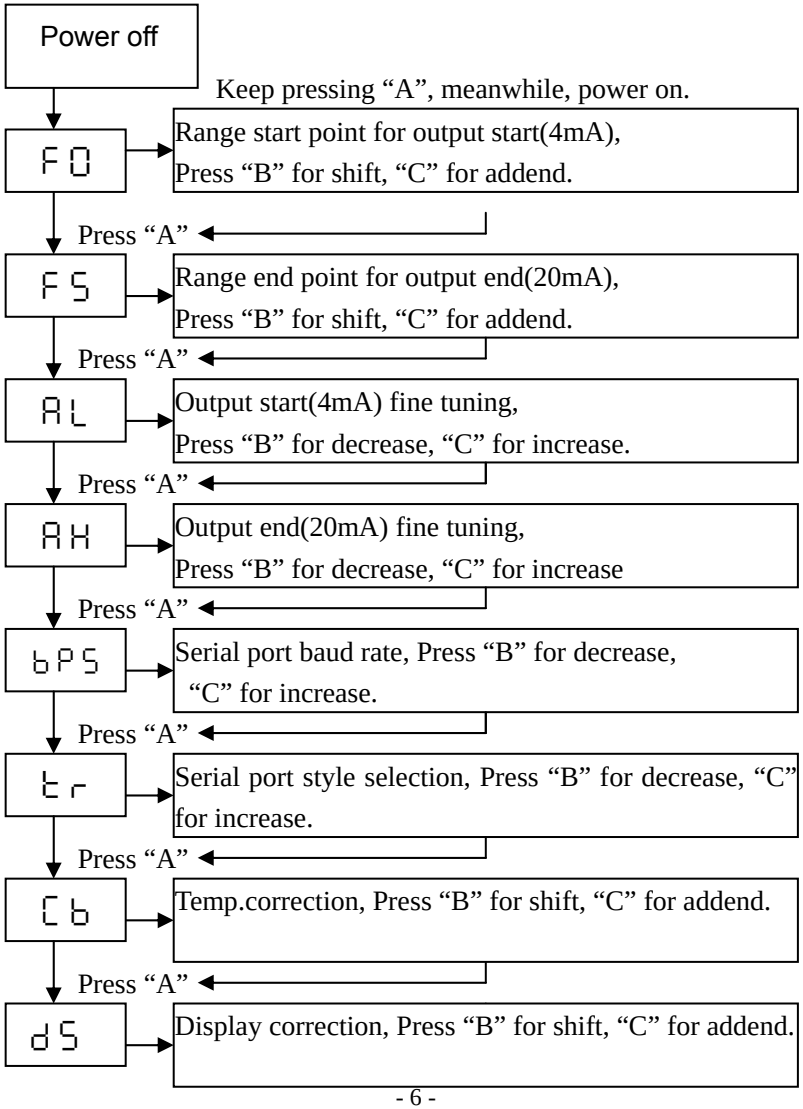

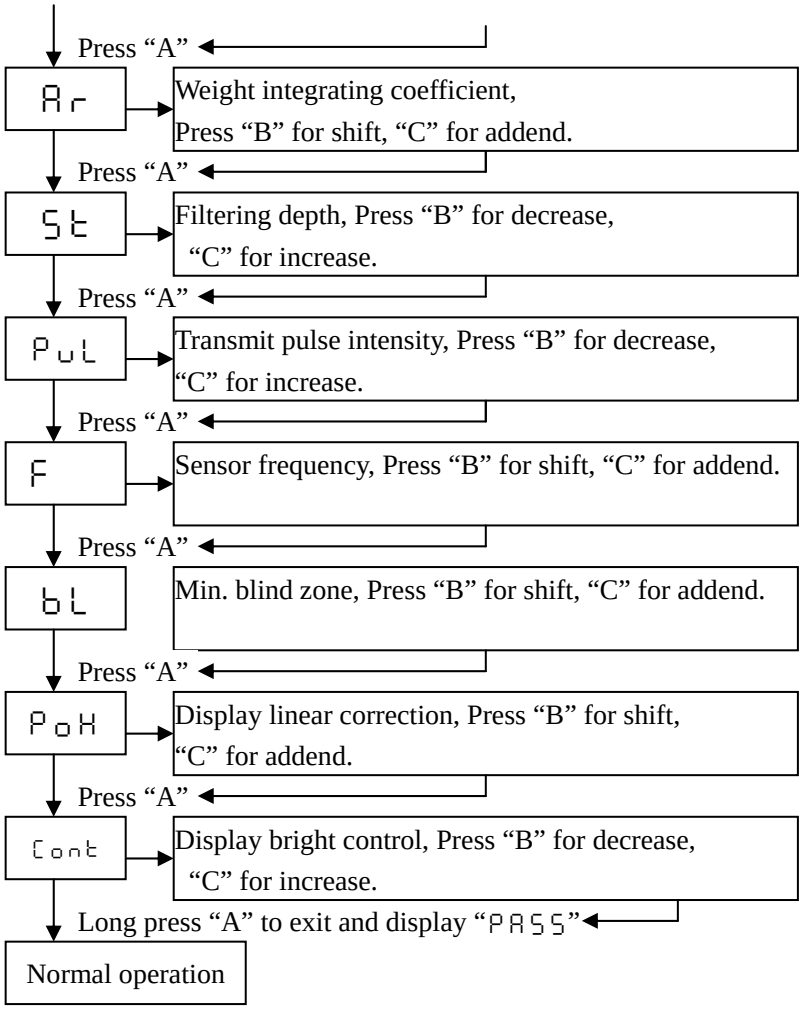

Note:_

◆◆ Only professional persons are allowed to implement the menu operation and menu adjustment ◆◆

Switch output logic are as follows(if level sensor is with switch ouput):

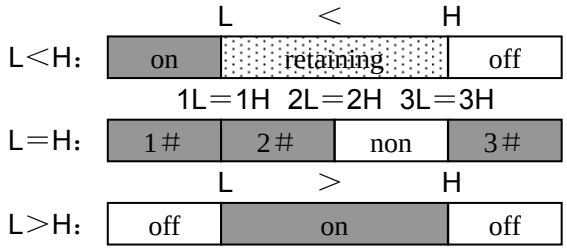

The explanation of switch output logic:

L＜H: When the displaying value is less than L, the switch power on, when the displaying value is more than H, the switch power off.

L＝H: When the displaying value is less than 1L(1H), 1＃ channel power on and other channel power off, when the displaying value is more than 1L(1H) and is less than 2L(2H), 2＃ channel power on and other channel power off, when the displaying value is more than 2L(2H) and is less than 3L(3H), all channel power off, when the displaying value is more than 3L(3H), 3＃ channel power on, other channel power off,

L＞H: When the displaying value is less than L and is more than H, the switch power on, or the switch power off.

5. Menu definitions

1L：start of passage No. 1 output control
1H：stop of passage No 1 output control
2L：start of passage No 2 output control
2H：stop of passage No 2 output control
3L：start of passage No 3 output control
3H：stop of passage No 3 output control
dr： address of this unit：same as that of master unit when it is online.
The effective value: 0～255. default value：1
bAd: When the increment measure mode is selected, bAd=0; When the difference measure mode is selected, bAd= B (that is, height from the

container floor to top of the probe of lever sensor. The unit is meter), Please see the last picture **in Part V.** Default value: 0 (Unit: m)

F0：Range start point for output start of 4mA；

FS：Range end point for output end of 20mA.

(Note: there are alarm in LED display of this sensor when it is 10% smaller than “F0” or BL, it display “LON” as alarm . When it is 10% larger than “FS”, it displays “OUT” as alarm .)

AL：Fine tuning coefficient of the output start (4mA);

AH：Fine tuning coefficient of the output end (20mA).

(effective value: 0～4095 for AL and AH, one effective value=0.006mA)

bPS：Serial port baud rate, 600～19200bPS; default value is 9600bPS

(it is useless for output of 4~20mADC)

Tr： Serial port style selection: 0=continous transmit (ASCⅡ),1=appointed by the master unit(ASCⅡ), 2= appointed by the master unit (IEEE-754)。 default valve：1 (it is useless for output of 4~20mADC)

Cb：Temperature correction(only fine tuning), default valve：0

(Note: In normal working condition, press “C” key ,it displays current environment temperature around sensor’head)

DS：Display correction(only fine tuning)

AR： Weight integrating coefficient =[(long×wide) or (floor area)]×specific weight. Default valve：1

(Note: AR must be “1” for measurement of level)

ST： Filtering depth (similar to sloshing compensation) (1－15 for options), The larger in this value ,the slower in display change and the more stable in measurement ,and vice versa; default valve：5

PUL：Transmitted pulse intensity(1－15 options); default value：5

F： Sensor frequency (unmodifiable)

BL： Min. blind zone setting; default value: 0.03

POH：Display linear correction (only fine tuning)

COUT：Display bright control (1－30); default value:5.

***** It is suggested that it is not necessary to amend parameters of CB ,DS,F and POH *****

V. Installation and precautions

Vertical installation to static liquid level to be measured

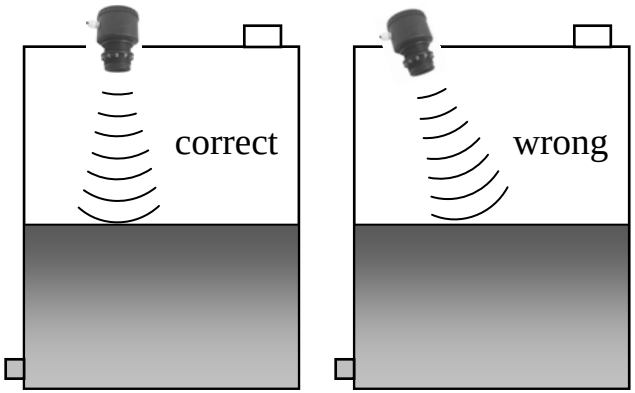

For liquid level with large wave, Use tube of reducing wave

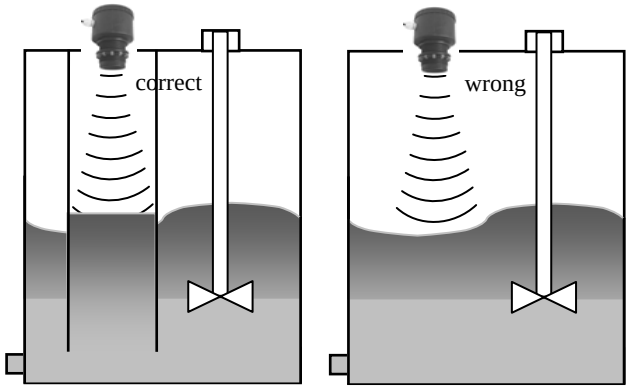

Vertical to surface to be measured and away from feed

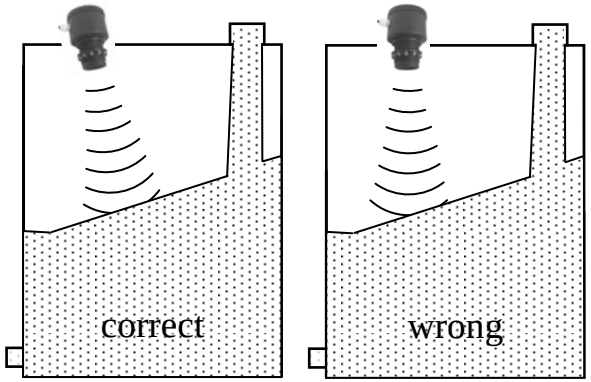

The differences between increment measure mode and difference measure mode

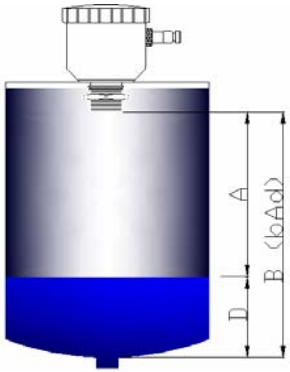

a. For difference measure mode, set **bAd** to be **B**(unit: meter) which is the total height from the container floor to top of the probe of lever sensor, **A** is the distance from probe to liquid level, **D** is the height of liquid level, that is, D=B - A, so the output value and display of level sensor is the height of liquid level(D).

(**Note**: If the bottom of the tank is smooth and there is no liquid in the tank, in working state, long press "B" key to set the difference measure mode automatically, that

is ,long press"B" Key until display of "BAD" in LED display)

b. For increment measure mode, set **bAd** to be 0, the output value of level sensor is the distance from probe to liquid level(**A**).

1. This sensor will be installed in installation tube with inside thread of M49 X 1.5 and the thread length of 0.06M or more on the top of the tank. Please refer to installation diagram for the required height of installation tube. Just screw the sensor into installation tube and tighten it. For a long stable and efficient operation, **it is strongly suggested to use a 12V DC power supply with anti- explosion. The cathode of the DC power supply should be connected to ground.**

2. Install this sensor according to the wiring diagrams of the <operation manual> or the label in sensor. In order to have stable working and accuracy of output, **Please power on and warm up the level sensor for more than 15 minutes before application.** After commissioning , "B" must be pressed to turn off the display to minimize power consumption (Press "B" again to turn on the display). Do not forget to tighten the back cover to prevent water or dust from entering. If it operate outdoors, it should be placed under a sun screen to avoid direct sunshine and rain. The measures of anti- lightning should also be taken.

3. Adjust the end of probe repeatedly to be vertical to the surface to be measured during installation. The distance between the probe and surface depends on the maximum distance of the surface to be measured, blind zone of the meter and range of probe.

4. If the liquid to be measured is sewage or others containing afloat impurities, a wire-fence should be placed under the probe to keep them out of the normal measurement range of the probe. Otherwise, correct and stable display can not be obtained.

5. If the liquid level to be measured fluctuates, keep the measurement range far away from the fluctuation as much as possible, or use a tube of reducing wave to minimize the fluctuation of liquid level.

6. The transmitted pulse intensity should be set properly, otherwise, it will not work normally .

VI. Wiring diagrams

1. Wiring diagram of current or voltage output, connecting with second instrument(The level meter is powered by the second instrument)

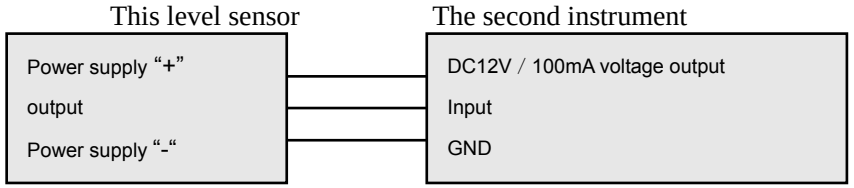

2. Wiring diagram of serial data output, connecting with PC

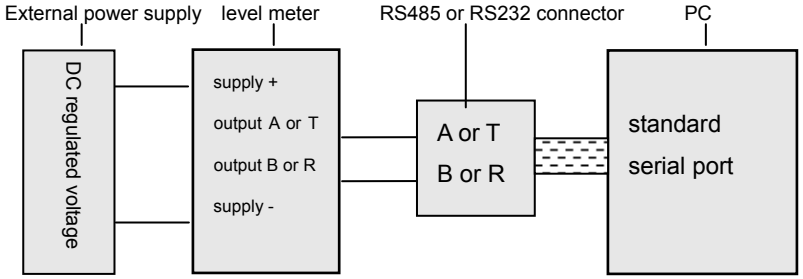

3. NPN switch output wiring diagram

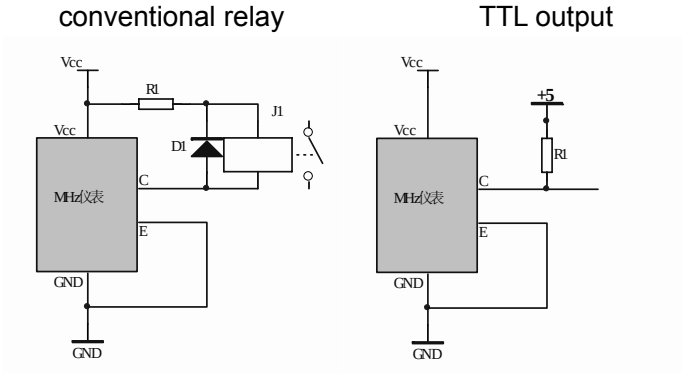

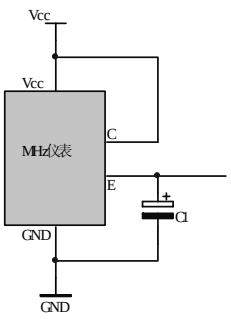

DC switch output

VII. Trouble shooting

No.	problem	probable reason	remedy
1	Not working when power on, no display, no sound of sensor, no data output.	① power is not connected or “+””-”polarities are connected reversely; ②too low voltage resulting no working or too high voltage resulting damage. RS485 communication is abnormal.	①check to ensure correct wiring as instructed. ②use 12V DC supply, (3).contact with distributor
2	No display of sensor but, with sound	①operation of turning off display has been carried out. ②connected to high voltage, damaging display chip	① press “B” to turn on display; ②contact with distributor.
3	With sound and display, but the values not change with distance	① too low input voltage leading to abnormal instrument. ② the sensor or power driver damaged.	①use 12V DC supply ②contact with distributor

4	With display and sound, no change with distance or irregular fluctuation of values	①too deflective installation ②improper setting of pulse intensity, leading to great residual vibration or diffraction ③more than 2 instruments on stream, interfering each other ④too much electromagnetic disturbance in working area	①adjust the axis of sensor vertical to surface to be measured ② in general with range of 1 m, transmit intensity is 2-5. ③ try to eliminate interference; ④find out disturbance source and shield from it.
5	With sound of sensor, “Lon” or “out” is displayed	① exceeding measure range ② too close between surface and sensor ③improperly used for high dust, foam or steam content fields, or too high or too low working temperature; improper setting of pulse intensity	① adjust actual range with permitted ② adjust working conditions as required ③ change transmitting intensity until stable display
6	With sound of sensor, display deviations exceeding 10cm	①non vertical installation, leading to multiple reflection ②installed too close to wall, sonic wave reflected on midway ③ check for correct setting of bAd ④check for correct display of temperature	①adjust installation positions several times. ② correctly set bAd value ③ for large temperature difference, adjust “CB” to proper value.

7	Abnormal 4-20mAoutput; too high or low, fluctuating	①too large load resistance ②measurement range FS changed, output tuning AL or AH changed ③undesired supply rectification and filtering ④The time of warming up is not enough	①lower load resistance ②readjust FS, AL or AH③ replace with DC regulated supply with larger capacity ④The time of warming up＞15 minutes
8	Serial port incommunicable	①reverse connecting of A and B ports , incorrect dr of serial ports ②wrong serial port bPS ③ erroneous serial port style tr	① change wiring, reset para.,to be same with those of master unit
9	Output control not activated	①wrong para. Setting ②external current-limiting resistor too large ③external current-limiting resistor too small, damaging the instrument	①reset para.② decrease current-limiting resistor ③ contact with distributor

VIII. Wiring definitions

Definition of wires	color	applied
Power supply +	Red wire	■Yes / □No
Power supply -	Black wire	■Yes / □No
Current output	Yellow wire	■Yes / □No
Voltage output		□Yes / □No
Serial output		□Yes / □No
Output control Ⅰ		□Yes / □No
Output control Ⅱ		□Yes / □No

Attention

(1).It is prohibited to change the anti-explosion circuit and any specification of electronic component in the anti-explosion circuit .

(2).Power supply with anti-explosion is necessary.

(3).It is prohibited to wipe the outside of shell in the danger field.

IX. Manufacturer Certificate

Product：Ultrasonic liquid level sensor(meter)

Type：FC-TI A -EX Serial No.：_____

Main specifications

Detecting range：FS=__1__m

Blind zone ：≤■60mm； □other_____

Accuracy：■±1mm; □other_____

Signal output：□ 4-15mA；■ 4-20mA；□0-5V；

□0.5-4.5V；□RS485 □RS232_

Working temperature：■atmospheric temperature；□-10-60℃；

□other_____

Working pressure：■atmospheric pressure；□other_____

Working humidity：≤95%RH

Storage temperature：-40—85℃

Storage humidity：≤70%RH

Working voltage：DC12V

Normal power consumption：＜1.5W

With anti-explosion circuit.

Inspected by： Date: