XMT*-JK408 series four-way temperature controller

Instruction manual

Ⅰ、Summary

XMT*-JK408 series intelligent temperature control instrument is a new meter to meet the market needs. The meter is controlled by single chip microcomputer, every channel setting value and some parameters can be set up independently. It has the advantages of small volume, low power consumption, simple operation, easy control, stable operation, reliable, economical characteristics. It is widely used in the temperature automatic control systems of machinery、chemical、ceramics、light industrial、metallurgy、petrifaction and heat treatment, and so on.

Ⅱ、Primary technical standard:

1、 Input signal**:** CU50（-50.0～150.0℃）、Pt100（-19.9～600.0℃）、
K（0～1300℃）、E（0～700.0℃）、J（0～900.0℃）

2、Accuracy: ≤±0.5%F.S±1B　Cold end compensating deviation≤±2℃

3、Relay output contact capacity: AC220V/5A (resistance load) or AC220V/0.3A (perceptual load)

4、Driving solid relay signal output: driving electric current≥15mA, voltage≥9V.

5、Control mode: difference control-on/off and PID control

6、Input power: AC85~242V　50/60Hz

7、Environment Temperature: 0 to 50℃,　Humidity: ≤85%RH

Ⅲ、Instrument panel instruction(consult)

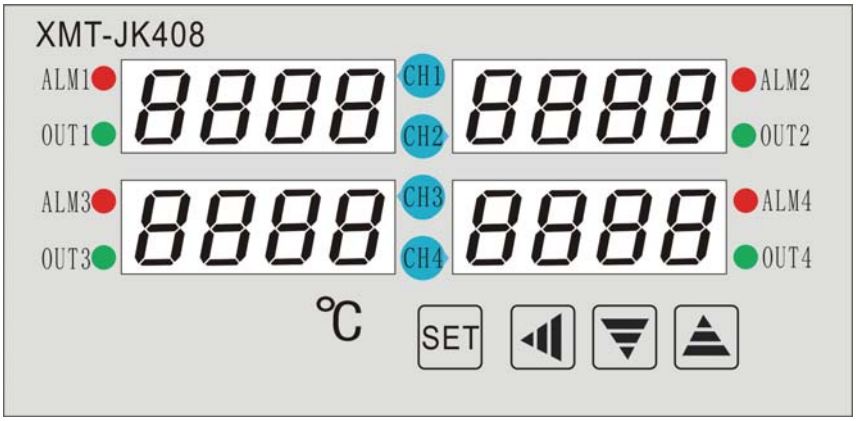

ALM1～ALM4：The first channel to the four channel alarm output indicator light (red)；

OUT1～OUT4：The first channel to the four channel control output indicator light (green)；

CH1～CH4 key: The first channel to the four channel corresponding channel parameter setting key；

SET key：Function setting key；　　◀ key：　Shift key；

▼ key：　Data decrease key；　　▲ key：　Data increase key；

Ⅳ、Model significance：

XMT－ JK 4 □ 8 □ □
(1) (2) (3) (4) (5) (6)

⑴Meter faceplate and Installation dimension(mm)：160×80×130； 152×76；

⑵Design serial number：Four channel independent control meter, PID and ON/OFF control can optional;

⑶ Alarm：‘0’：no set alarm； ‘1’：one alarm (alarm mode optional)；

⑷Input signal： “8”: Free exchange of the input signal

⑸ Main control mode： ‘space’：relay normally-open contact output;

‘A’：Single phase zero trigger control; ‘G’：Solid state relay control output

(6) Suffix：‘K’：with 485 or RS232 Communication module interface；

‘WT’：With an external mini printer module interface

Ⅴ、Code setting mode

Series		Code	Name	Setting range	Manual	Ex-Factory
First Menu	0	**LOCK**	Electronics lock	0～50	LOCK=18, all the parameter can be revised; LOCK≠18 all the parameter can not be revised	18
	1	**Sn**	Input type	CuSO、Pt2、K、E、J	CU50（CuSO）-50.0～150.0℃ Pt100（Pt2）-199.9～600.0℃ K（K）、 -30.0～1300℃ E（E）、 -30.0～700.0℃ J（J） -30.0～900.0℃	K
	2	**ALP**	Alarm output definition	0～6	‘0’no alarm; ‘1’upper limit alarm; ‘2’lower limit alarm; ‘3’positive deviation alarm ‘4’negative deviation alarm. ‘5’outside the interval alarm ‘6’inside the interval alarm	1
	3	**t**	Output cycle	0～120 S	relay control action cycle setting	10 S
	4	**dp**	Display accuracy	0~1	1: have radix point, 0: have not radix point	0
	5	**P-SH**	The max. value of temperature range	**P-SH≥P-SL**	They are used to reset proper temperature range as per user’s application. As for the Max. temperature range for different inputs, please refer to **Sn,**	1300
	6	**P-SL**	The min. value of temperature range			0
	7	**OPB**	Assistant output method	0~2	0：no Assistant output； 1：RS485 communication 2：Mini printer	0
	8	**Add**	Address	1～64 （1～9999min）	The meter’s number in the control system (in mini type as print times)	1
	9	**bt**	Baud rate	——	1200；2400；4800；9600 Four optional	9600

In the following parameters, N represents the corresponding channel number 1 ~ 4.						
Second Menu	10	**SP＋N(1~4)**	N channels control setting	Rang decide by P-SL, P-SH, deviation alarm range : 0.5～100	Setting value of temperature	50
	11	**AL＋N**	Alarm value setting		Please refer to **ALP1**	200
	12	**SC＋N**	Sensor error amendment	±20.0	The sensor have deviation can use item to revisal	0
	13	**P＋N**	Proportion modulus	0～100	When the P increase, the proportion function decrease. **When P=0,the meter is ON/OFF control**	8
	14	**I＋N**	Integral time	0～3000	Set integral time so as to unchain residual. Deflection caused by proportion control. To increase it, the static difference will be reduced, but when it is too high, the static difference will drift instability.	240
	15	**d＋N**	differential time	0～200S	Set the differential time，so as to avoid. The output's fluctuation, Improve the control's stability.	30
	16	**Hy＋N**	Main control by drop in level	0.1～50.0	It makes sense when only ON/OFF control.	1.0
	17	**At＋N**	Setting itself (auto-tune)	0~1	0：Close setting itself function 1：Open setting itself function Please refer to "Ⅶ、Setting itself"	0

Ⅵ、Technical indexes

6.1、Accurately connect wires according as connect indicator, power on.

6.2、Press 'SET key' for 3 seconds, enter into first menu. then 'parameter 'and parameter value times will be shown respectively about 'CH1 window' and 'CH2 window', you can adjust these parameters by pressing '▲'、'▼'、'◀'、and save the setting by press 'SET key ',every parameter should be saved after setting ,then enter next parameter set.

6.3、You can press 'CH1'、'CH2'、'CH3'、'CH4' for 3 seconds to enter into corresponding channel menu. After finished one parameter set, press 'SET' to save it, then enter into next parameter set.

Ⅶ、Setting itself:

The meter use in the first time or the surroundings have changer, finding it control not good, this time you need use the setting itself. For example:

At first set up the corresponding channel setting value, and then enter into the corresponding channel menu, set the corresponding Hy is 0.5～1℃, set the AT=1, "AT" and the measured temperature value flash alternately, the meter enter into setting itself, the meter have three times vibrate, automatic preserved P, I, D parameter and the setting itself finish.

Note：①when the power off during setting itself, as the meter has the memory, it will restart setting itself next time.

②when it need artificially exit during setting itself, set the corresponding channel self-tuning

the parameter AT to 0 so that can exit，but the setting result will not be valid.

Ⅳ、connection scheme(consult)

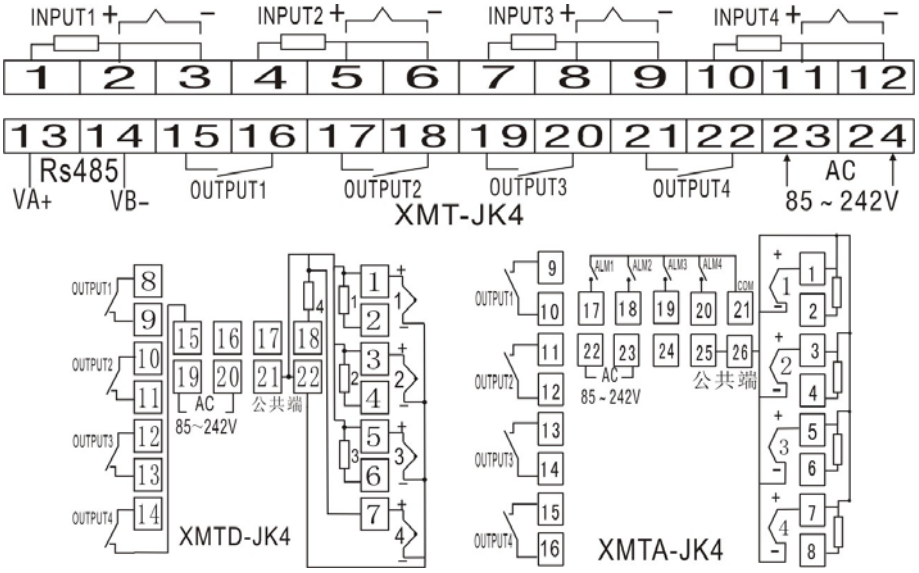

Notice: The meter's signal input used to isolate type sensor, or that may affect the meter's measurement.

Ⅷ、Fault Analysis and Clearance

XMT*-JK408 Series temperature controller adopt advanced production process, and have the strict test before leaving factory, it improve the reliability of the meter .The usual fault caused by the wrong operation or parameter setting. If you find the fault couldn't be cope with, please record it, and contact with the agent or us. Sheet 8-1 is the usual fault of XMT*-JK408 series temperature controller in the daily application：

Sheet8-1 Common fault disposal

Fault symptom	Analysis of causes	Disposal measurement
Abnormal power	1、Poor contact of power cord 2、Power switch without lose	Check the power
Signal display do not correlate with the facts.（display 'HH'or 'LL'）	1、Sensor model mismatch 2、Wrong signal connect ion	1、Check sensor model and meter interior input parameter 2、Check signal wire
Abnormal control output	Wrong connection of output wire	Check output connection

Note: Our company will continue to improve product technology, design specification. If change, please subject to the material object, without notice.

Attached 1：Statement of meter's parameter attention letter and English letter

A	B	C	D	E	F	G	H	I	J	K	L	M
A	b	C	d	E	F	G	H	I	J	K	L	n̄
N	O	P	Q	R	S	T	U	Y				
n	o	P	q	r	S	t	u	y				