XMTG-918T intelligence digital temperature controller (with timer) Instruction Manual

Ⅰ、Survey:

XMTG-918T intelligence digital temperature controller ,equipped with single chip and double row 4 -digit LED display, has seven free input signals of thermocouple and thermo- resistance , ON/OFF control and PID control. It also has time function with selectable time unit of hour/minute or minute /second . With the parameters set by using function of setting itself(AT function),their control effect can be satisfied in the most of case. There are characters of no over-regulation and good anti-interference in this type controller. They are widely used in the temperature automatic control system of machinery, chemical, ceramics, light industry, metallurgy, petrochemical and heat treatment industry, etc.

Ⅱ 、Main technical specification

- Basic deviation：±0.5%F.S±1 b
- Cold end compensating deviation：≤±2.0℃
- Resolution: 1 or 0.1
- Sampling cycle：0.5s
- Control cycle: 2～120s for relay output and it can be adjusted
- Input type and their max. temperature range:

CU50:	-50.0 ～ +150.0℃	PT-100:	-199.8 ～ +600.0℃
K :	-30.0 ～ + 1300℃	E:	-30.0 ～ +700.0℃
J :	-30.0 ～ +900.0℃	T :	-199.8～ +400.0℃
S:	-30. 0～ +1600℃		

- Time range：1S～59. 59H
- Time precision：class 0.005
- Relay contact capacity of control output：AC250V/7A（resistance load）
- Relay contact capacity of alarm and time output：AC250V/3A（resistance load）
- Power supply：AC85V～242V, 50/60Hz，
- Dimension: 48mmX48mmX110mm, Hole for installation: 44mmX44mm
- Working environment: temperature 0～50.0℃, relative humidity≤85% RH, without corrode gas and strong electromagnetism radiation.

Ⅲ、Panel description

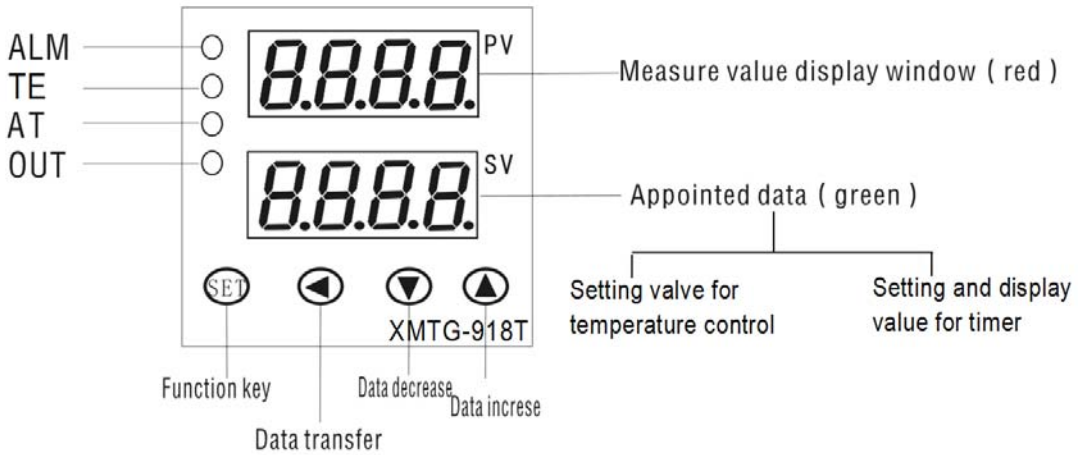

Ⅳ、Parameter code

Series	Code	Name	Setting range	Remark	Preset value in factory
0	SP	Appointed data	Determined by P-SL P-SH	—	50.0

1	tE	Setting of timing	1～59.59	Connect terminal 11 and 12(RESET), when temperature reach the setting value meter start timing(countdown) the terminal TE2 will be connected and give out an alarm(you may install buzzer in TE2) after time is up. Disconnect terminal 11 ans 12 for reset. Connect terminal 11 and 12(RESET) again, it will do same as the above.	10
2	AL1	Temperature alarm	(a).Temp.upper limit alarm is determined by P-SL,P-SH, (b).Range of follow up alarm is 0.2 ～100.0 .	It can be set temperature upper limit Alarm or follow up alarm	100
3	P	Proportion	0～200.0	When the P↑,the proportion function↓. overheating ↓, but ,it will take more time to increase temperature. **When P=0,the meter is under ON/OFF control**	8.0
4	I	Integral time	0～3000S	Setting the Integral time can eliminate the steady-state error after proportion control. If I is too big ,it will take the longer time to reach steady system. If I is too small, it will fluctuate.	240
5	d	differential time	0～200S	To prevent output fluctuation ,so as to Increase stability of control.	30
6	At	Setting itself function	OFF：close the function ON：open the function	Selection of the Setting itself function	OFF
7	t	proportion Control period for relay output	2～120 S	Not this function under ON/OFF control	20
8	HY	Main control deviation	0.1～100.0	Only have meaning under ON/OFF control(P=0)	1.0
9	HY1	Alarm deviation	0.1～100.0	It is used for deviation setting of alarm output	1.0
10	Pb	Sensor error amendment	±20.0	If there is deviation for sensor, It is used for revisal	0
11	FILt	Filt modulus	0～50	It is the software filter constants of measurement and sampling. The constant ↑, the Measurements antijamming Capability ↑, but the measurement time and system reaction time ↓	20
12	LocK	Code lock	0～50	0- all the parameter can be revised 1- only the SP and TE value can be revised >1. no parameters can be revised	0
13	Sn	Input type	—	CU50、PT100 、K 、 E 、 J T and S, available for free selection	J
14	P_SH	To display the high limit	P-SL～full range	It can set the high limit of displaying value for input signal	900
15	P_SL	To display the low limit	Range start ～*P*-SH	It can set the low limit of Displaying value for input signal	0
16	outH	Allow output max value	OUTL～100.0	It can set the Max. output value But not under ON/OFF control output	100.0
17	outL	Allow output min value	0.0～OUTH	It can set the Min. output value But, not under ON/OFF control output	0.0
18	ALP	Temperature alarm output definition	0～1	'0' upper limit alarm '1' follow-up alarm	0
19	tEP	Time unit selection	0～1	0：minute /second 1：hour/minute	0
20	Cool	System function selection	ON/ OFF	OFF：reverse control(heating control) ON：positive control(cooling control)	OFF
21	oP_A	Output method selection	—	SSR solid state relay output RLP relay output method	RLP
22	oPPO	output Power coefficient when switching on	0～100	It is soft start function. It is Unit of percentage (%) For first output power of	0

				meter after switching on It is for output method of SSR only	
23	C F	Fahrenheit and degree centigrade selection	℃/℉	C：℃ F：℉	C
24	dP	Display accuracy	ON/ OFF	ON: display has radix point, OFF: display has not radix point	OFF
25	Int	Time function selection	0～3	**0**：common temperature control(with one alarm)without timing function(It should be set to be ‘0” when you use “AT’ function). **1**：Connect terminal 11 and 12(RESET), the meter start timing when it reaches the setting temperature . The TE relay will output after reaching setting time. The controller’output relay keep on same working situation(keep on heating) **2**：Connect terminal 11 and 12(RESET), the meter start timing when it reaches the setting temperature. The TE relay will output after reaching the setting time,Meanwhile, the controller’output relay operate to stop heating； **3**：temperature control（with one alarm）＋time relay：In this case, temperature controller and time relay are working respectively. a).Temperature controller: It control temperature normally. b).Time relay: It works as follows: Connect terminal 11 and 12(RESET), Timer start timing(countdown) the terminal TE will be connected and give out an alarm(you may install buzzer in TE) after time is up. Disconnect terminal 11 ans 12 for reset. Connect terminal 11 and 12(RESET) again, it will do same as the above. **Note:** If the time function is changed, the new time function will be effected after switching on meter again.	0

Ⅴ、Flow chart：

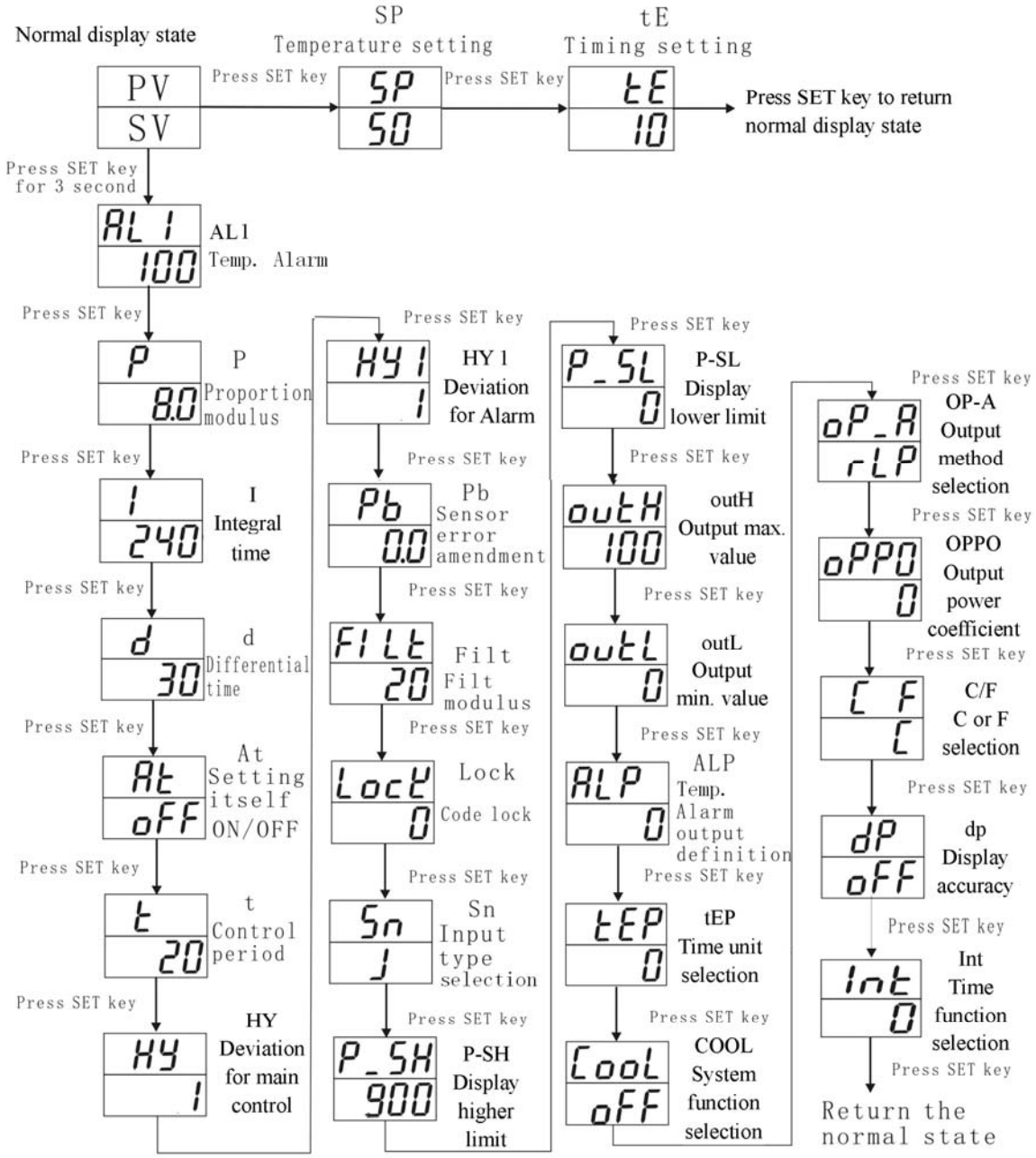

Ⅵ：Method of setting parameters

1、The first setting area

After switching on the meter, press the SET key for 3 second to enter into the first setting area, the meter will display the parameter code at the upper row and display the parameter value at the low row respectively from series No. 2 to 25 in sequence in the window. In this time, press the ◀ key,▲、▼ to adjust the parameter value to be a desired data, then press the SET key to save it. Go on in same way for adjustment of next parameter till the end. Press the SET key long time for withdraw or press the SET＋◀ key in same time for direct withdraw. If not press any key within 10 second, then it will save the value and withdraw from the setting status automatically.

The parameter in series No.12 is LOCK，all parameters can be modified when it is 0. When it is 1, only the setting value “SP” and “tE”in the second setting area can be modified. When it is larger than 1, all parameters can not be modified. The users are not allowed to set the parameter of LOCK to be larger than 50, otherwise, it is

possible to enter into factory' testing status wrongly.

2、The second setting area

After switching on the meter, press the SET key and release, it will enter into the second setting area, The "SP" and "tE" can be set in the same way as the first setting area.

3、Timing function：

Connect terminal 11 and 12(RESET), when temperature reach the setting value, the meter start timing(countdown). The terminal TE will be connected and give out an alarm(you may install buzzer in TE) after time is up.

Disconnect terminal 11 ans 12 for reset.

Connect terminal 11 and 12(RESET) again, it will do same timing as the above.

Ⅶ、Function of setting itself

When the meter is used at first or the control performance is worse after the condition changes, it is necessary to use this function of setting itself to set the parameters ,such as P、I、D,etc.，so as to avoid the trivial job of manual operation which can not reach perfect effect in the past. The time of setting itself depends on working condition. Take temperature control (reverse/heating) for example, the method are as below：

After setting the desired setting value of temperature, set **HY** to be 0.5～1.0℃, set **Int** to be 0 (it is status of temperature control without timer), set "AT" to be ON，AT lamp starts glittering, the meter enters into the status of setting itself, and the control method is ON/OFF in this time；After three times vibration, it will automatically save P、I、D parameter, AT lamp goes out, the process of setting itself is over.

Note：① If the power goes off during setting, it will restart setting after switching on the meter next time. It is because the meter has memory function,

② If the setting should be stopped and exited artificially during setting,, set "AT" to be OFF, then it can exit, but ,In this case, the setting result will be of no effect.

Ⅷ、connection scheme

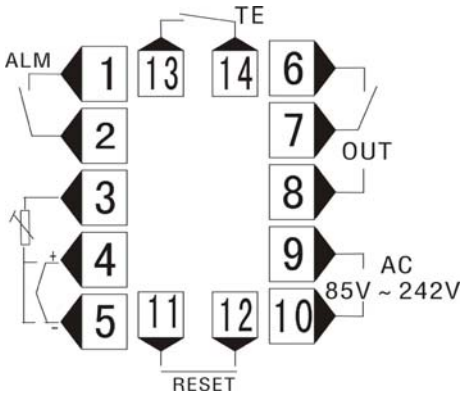

Note：This connection scheme is only for reference. it should be subject to the drawing on meter.

Ⅸ、Fault ,Analysis and Clearance.

XMTG-918T temperature controller with advanced production process and the strict test before leaving factory, improve their reliability much .The usual fault is caused by the wrong operation or parameter setting .If the fault couldn't be solved well, please record it, and contact the agent or us. Sheet 9-1 is the usual fault of XMTG-918T temperature controller in the daily application：

Sheet 9-1 Clearance for usual fault

fault symptom	analysis of causes	Clearance
Power supply is not normal	1、poor contact of power cord 2、power switch doesn't close well	Check the power
Signal display does not conform to the facts.（display 'HH' or 'LL'）	1、Sensor model mismatch 2、wrong signal connection	1、check sensor model and parameter of input type in meter 2、check signal wire
Output control is not normal	1、wrong connecting of output wire	1、check output connection

★ **★Remark：Our company will improve product technology、design and specification Continually without notice，it is subject to the object.**